24"
183.5"
18 ft

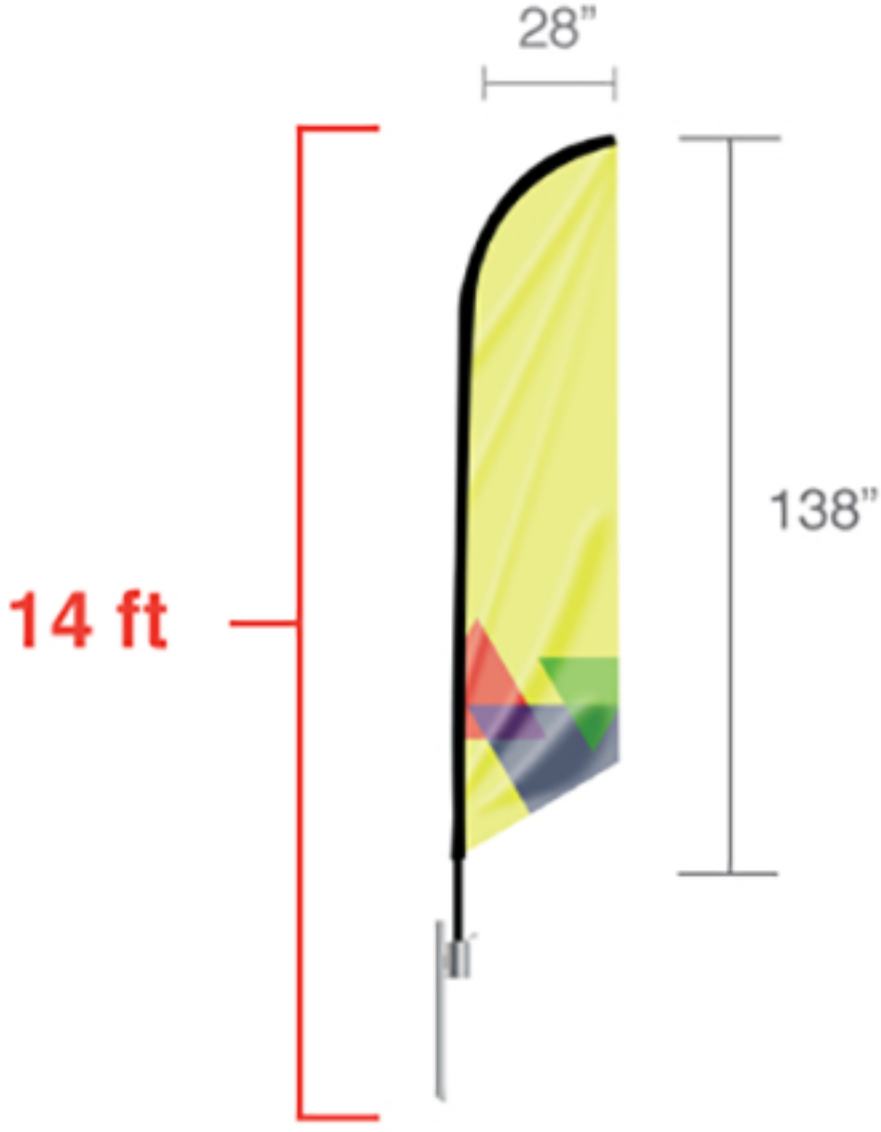
28"
138"
14 ft

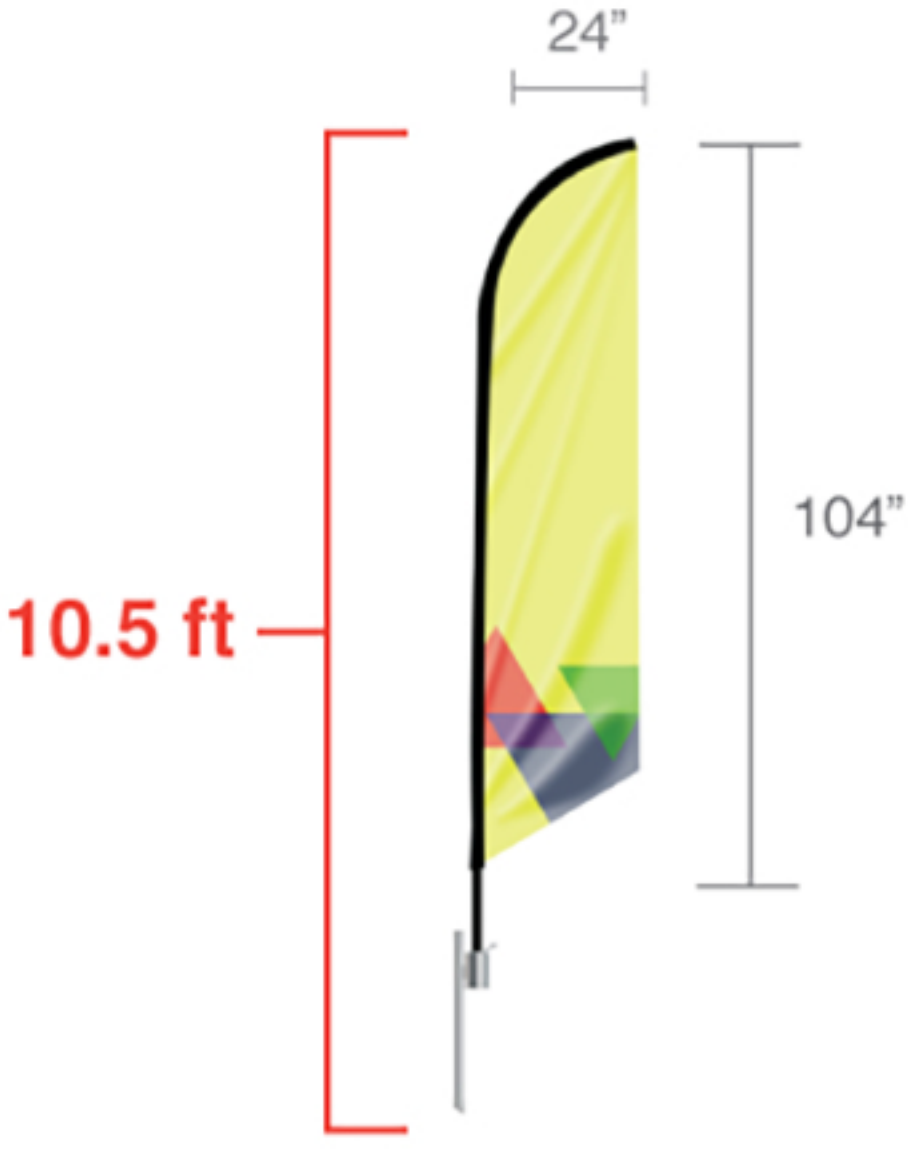
24”
104”
10.5 ft

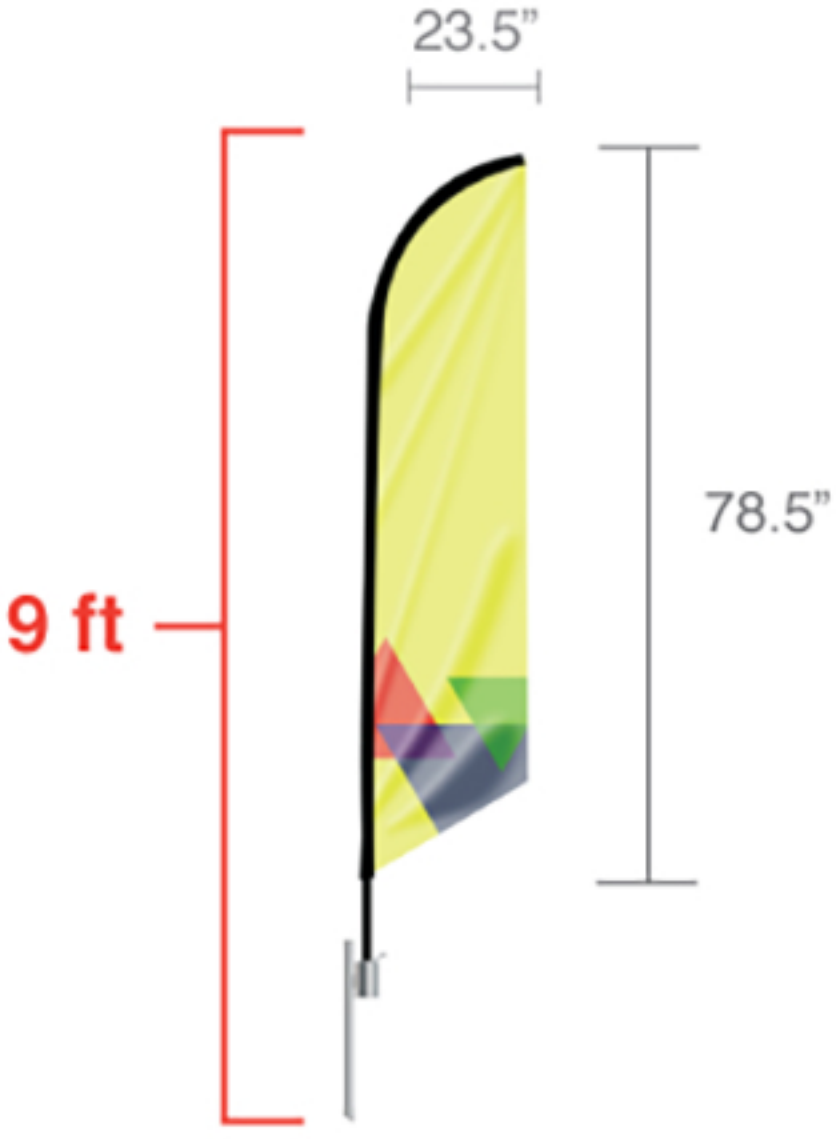
23.5"
78.5"
9 ft

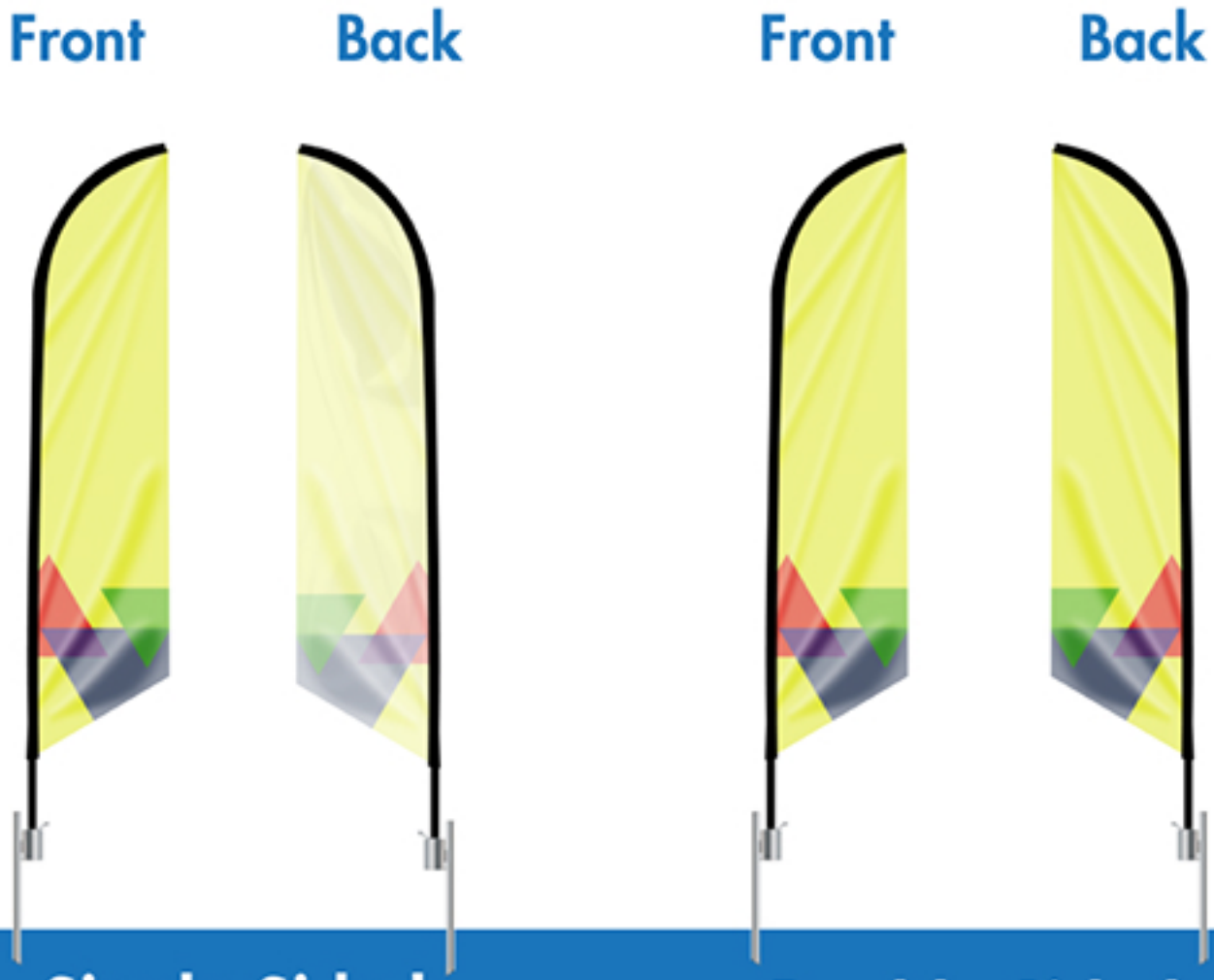

Single Sided
Print Through

Double Sided
Printing

FEATHERED ANGLED

Print Thru Reversed

POLE SET

GROUND STAKE

SQUARE BASE

CROSS BASE

WATER BAG

WATER BAG
W/ CROSS BASE

Carrying Bag

for Medium and Small Flags

Optional base accessories shown. May not be included.

Template User Guide

These instructions will guide you through the use of our templates. Please follow the instructions carefully. If you require further assistance please contact customer service.

General Directions

- **We recommend the use of dedicated graphics programs for the creation of all print ready files. We provide PDF templates for use with Adobe Illustrator, as well as PSD templates for use with Adobe Photoshop, and CDR templates for use with Corel Draw. Graphics created in other programs may lead to unpredictable print results and should be submitted as JPEG files to eliminate most variables.**

Template Use Instructions

- - Please create your design on the layer named “Artwork” or on a separate layer on top of our template.
- - Once your design is complete, delete all template layers provided, leaving only your designed graphic.
- - Flatten all objects/transparencies/gradients/swatches and outline all text.
- - Save the file as a flattened PDF or full sized JPEG at 150 dpi.
- - The final designed graphic should be the exact same dimensions as the template provided. If using a PDF template in illustrator, do not adjust the size of the artboard, size and placement is critical for a proper print.

Additional Tips

+ Our template is used as a guide or reference to show general placement of logos/graphic elements.
+ We print on white material, if you leave an area blank it will print white.
+ For Advertising Flags, leave a safety margin of at least 2" from all edges to prevent text from being cut off/hemmed over.

Submitted File Requirements

- PDF FILES: Flatten all Objects/Gradients/Swatches/Symbols/Special Effects/Transparencies.
- PDF FILES: Outline all text.
- Please submit FLATTENED PDF (Single Page) or JPEG file types only.
- Remove all crop marks/bleed otherwise they will be printed.
- Custom Sized Products: Submitted Graphic must be the exact dimensions of the product ordered (exception is Gallery wrap Fold Edge and templates).
- Template Products: Submitted Graphic must be the exact dimensions of the TEMPLATE provided. Not just the Graphic Size.
- CMYK only (we do not print Pantone/5th/Spot/RGB) Pantone/Spot colors may print incorrectly and should not be included.
- Files should be 150 dpi
- Do not scale template files, they may be flattened and submitted at 150 DPI.
- Graphics over 200" can be scaled.
- Max file size is 300 MB

IMPORTANT
***Remove EVERYTHING from your file that you do not want printed on the final product - especially hidden layers and template guidelines.

- Make sure all objects are embedded and flattened (we do not print Non-Native Art).
- If the file is made in Indesign, please flatten the file in Illustrator or Photoshop and export to a JPEG ONLY as we don't recommend using Indesign at our facility.
- If using Compound Paths to create transparencies/shapes, please completely rasterize or flatten them into the file or they may print incorrectly.

- We do not have specific measurements for Panel jobs. If you are printing in Panels, please make sure you are providing a minimum of 1" overlay in your files.

If you have any questions about file set-ups, please contact us via phone 1-888-739-8501 or email at info@b2sign.com.

Feather Flag Angled - X-Large
Illustrator Template
*CMYK Color space

1. Place your artwork on the "Artwork" (Top) layer
2. Save as a PDF

www.b2sign.com

FEATHER FLAG - XL

Feather Flag Angled - X-Large - Double
Illustrator Template
*CMYK Color space

1. Place your artwork on the
   ARTWORK HERE layer
2. Save as a PDF

www.b2sign.com

FEATHER FLAG - XL

FEATHER FLAG - XL

Feather Flag Angled - Large
Illustrator Template
*CMYK Color space

1. Place your artwork on the ARTWORK HERE layer
2. Save as a PDF

www.b2sign.com

FEATHER FLAG - L

Feather Flag Angled - Large
Illustrator Template
*CMYK Color space

1. Place your artwork on the ARTWORK HERE layer
2. Save as a PDF

www.b2sign.com

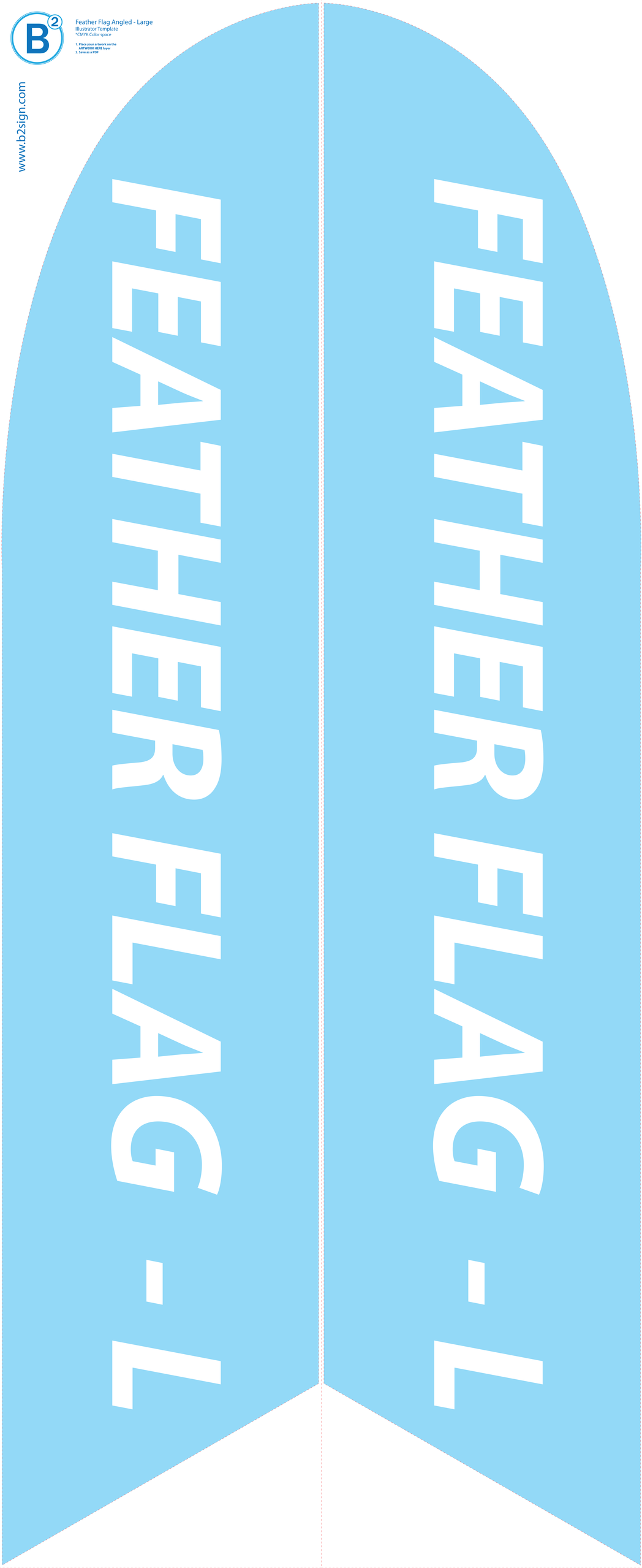

Feather Flag Angled - Medium
Illustrator Template
*CMYK Color space

1. Place your artwork on the ARTWORK HERE layer
2. Save as a PDF

www.b2sign.com

Feather Flag Angled - Medium
Illustrator Template
*CMYK Color space

1. Place your artwork on the
   ARTWORK HERE layer
2. Save as a PDF

www.b2sign.com

FEATHER FLAG - M

FEATHER FLAG - M

Feather Flag Angled - Small
Illustrator Template
*CMYK Color space

1. Place your artwork on the ARTWORK HERE layer
2. Save as a PDF

www.b2sign.com

FEATHER ANGLED FLAG- S

FEATHER ANGLED FLAG- S

FEATHER ANGLED FLAG- S

Feather Flag Angled - Small
Illustrator Template
*CMYK Color space

1. Place your artwork on the ARTWORK HERE layer
2. Save as a PDF

www.b2sign.com